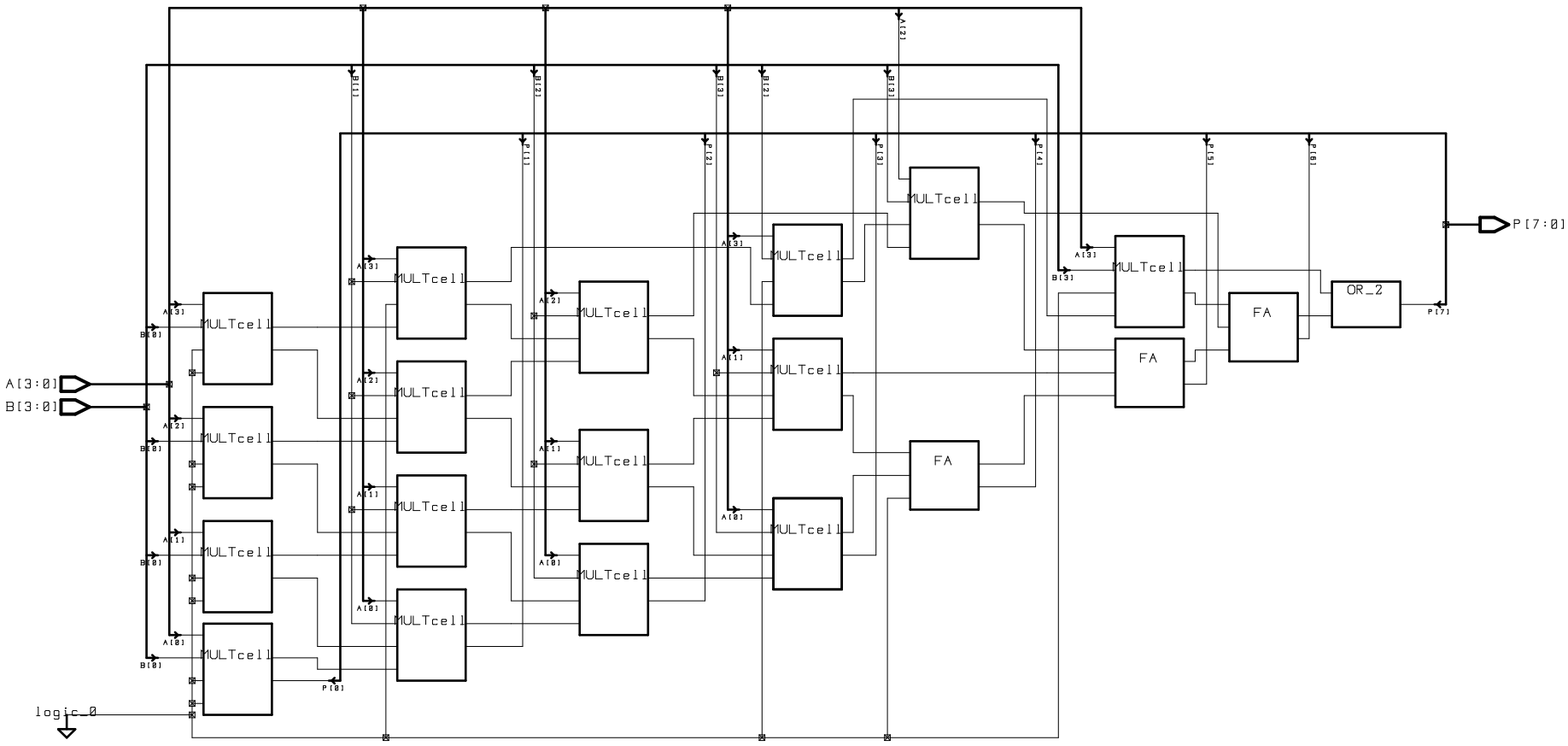

design: MULTstruc	designer: cjt	date: 7/7/95
technology:	company: REFT	sheet: 1 of 1