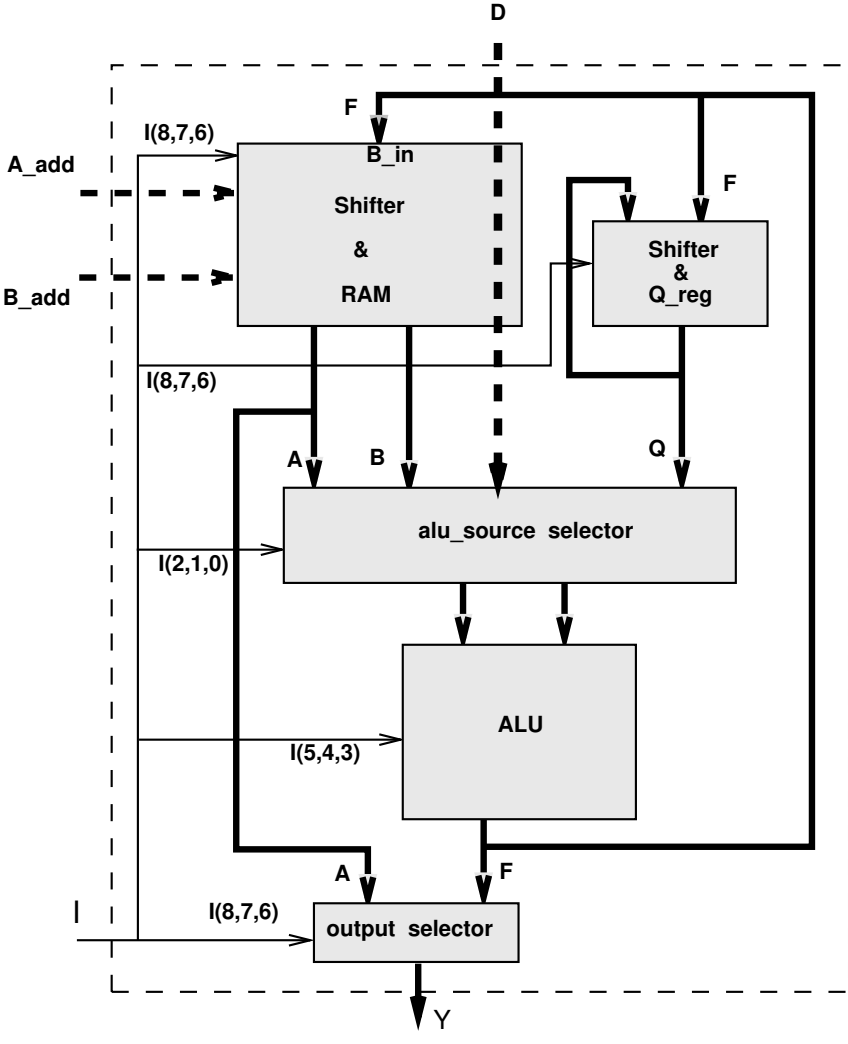Block diagram of Am 290